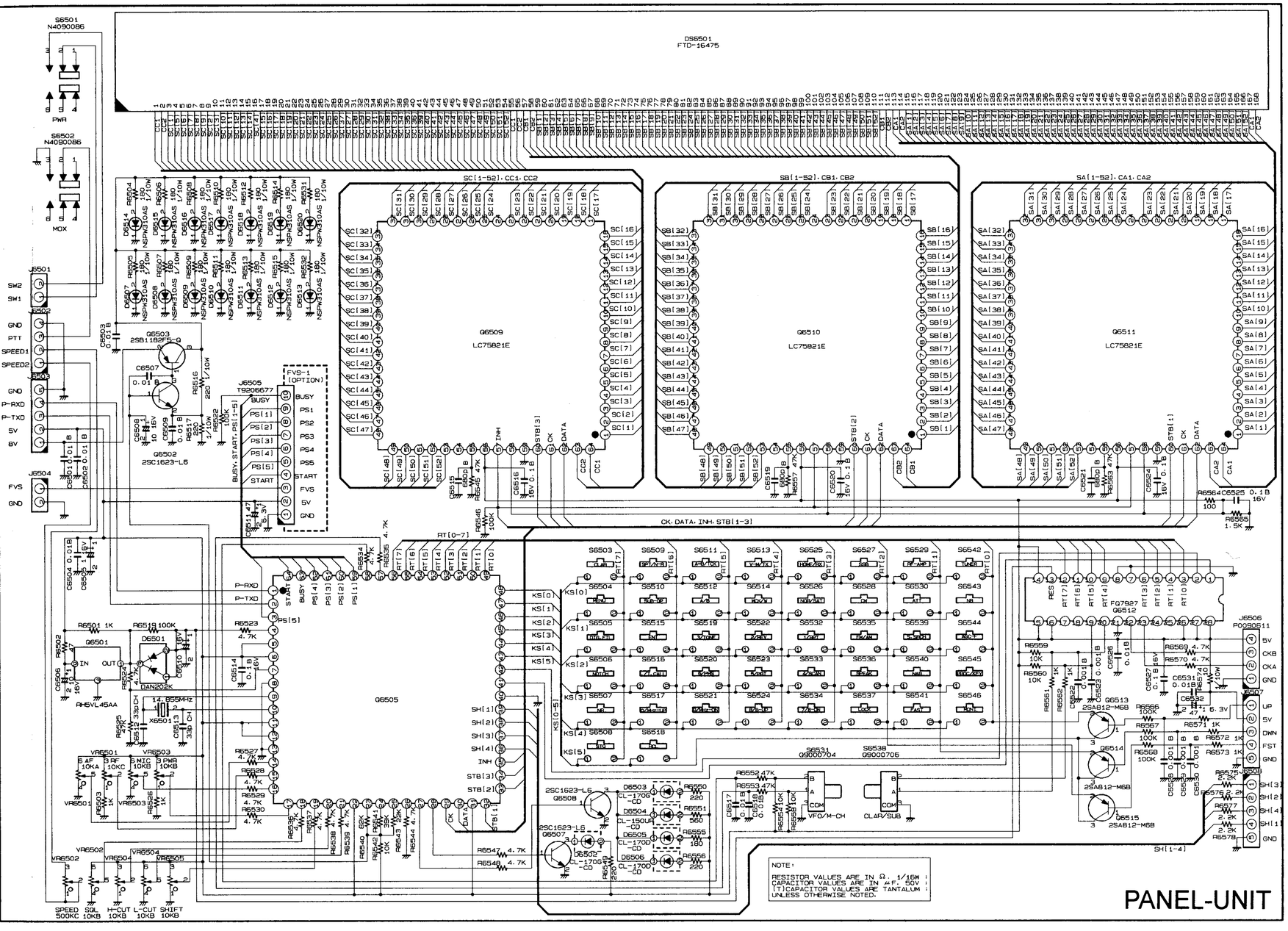
PANEL-UNIT
DS6501
FTD-16475
Q6509
LC75821E
Q6510
LC75821E
Q6511
LC75821E
Q6505
NOTE:
RESISTOR VALUES ARE IN Ω. 1/16W :
CAPACITOR VALUES ARE IN μF. 50V :
(T)CAPACITOR VALUES ARE TANTALUM :
UNLESS OTHERWISE NOTED.

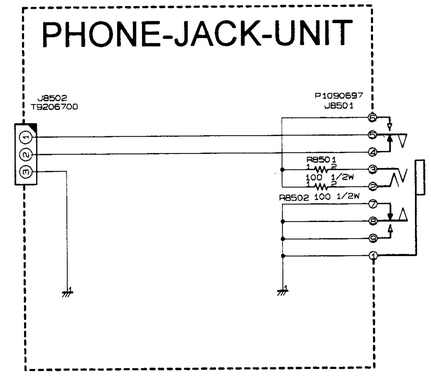
PHONE-JACK-UNIT
J8502
T9206700
P1090697
J8501
AF PWR
SP
GND

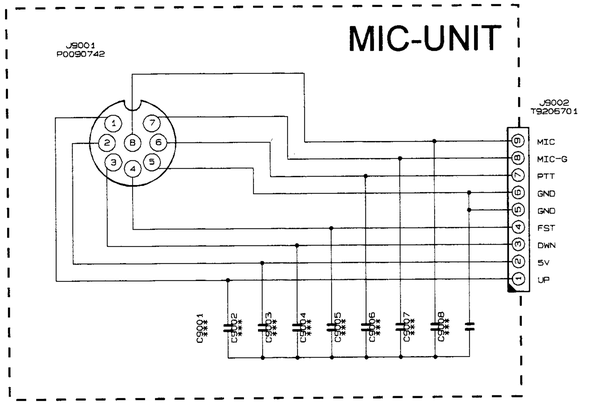
MIC-UNIT
J9001
P0090742
J9002
T9206701
MIC
MIC-G
PTT
GND
GND
FST
DWN
5V
UP

AF-CNTL-UNIT BR001470B

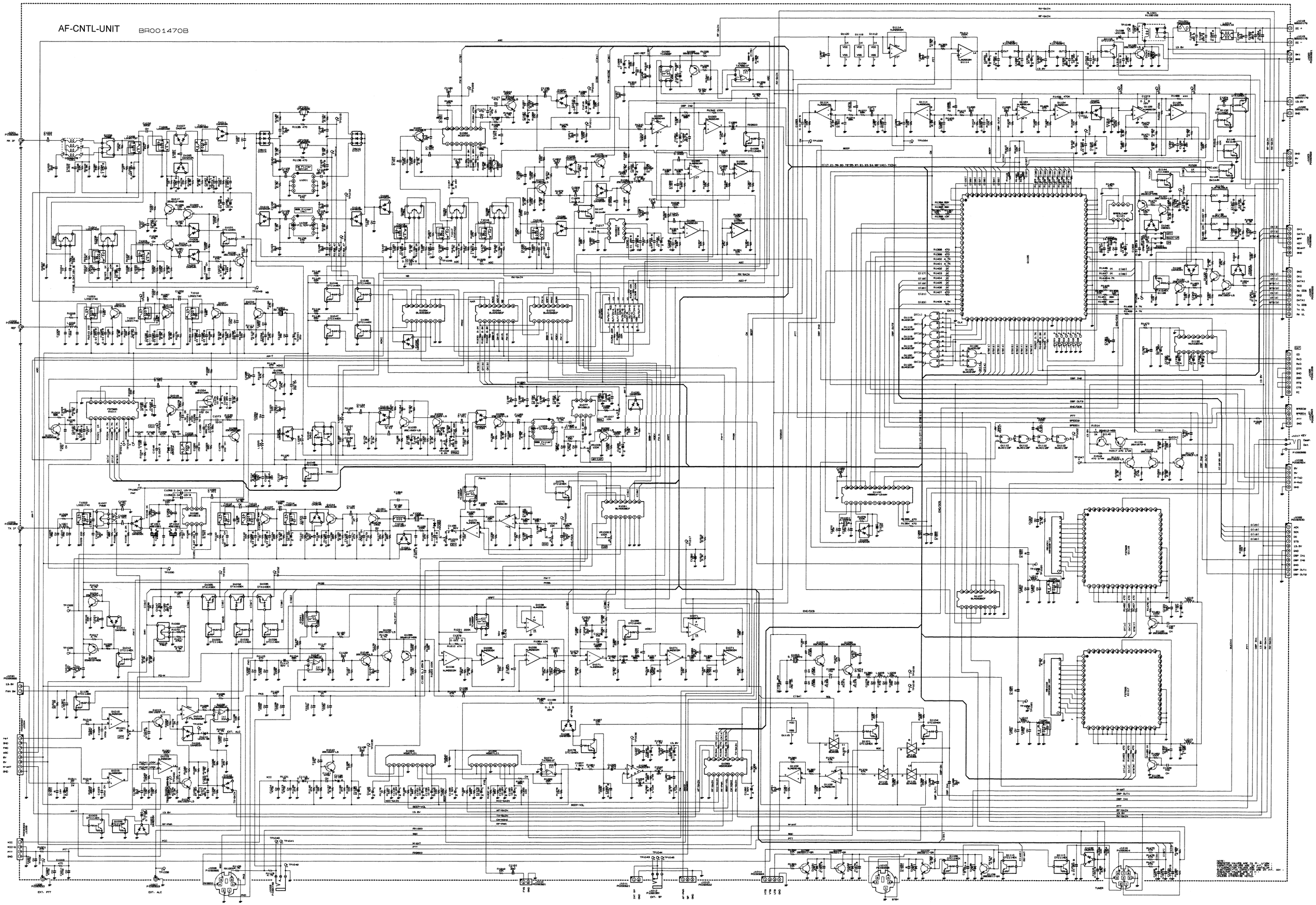

PA-UNIT

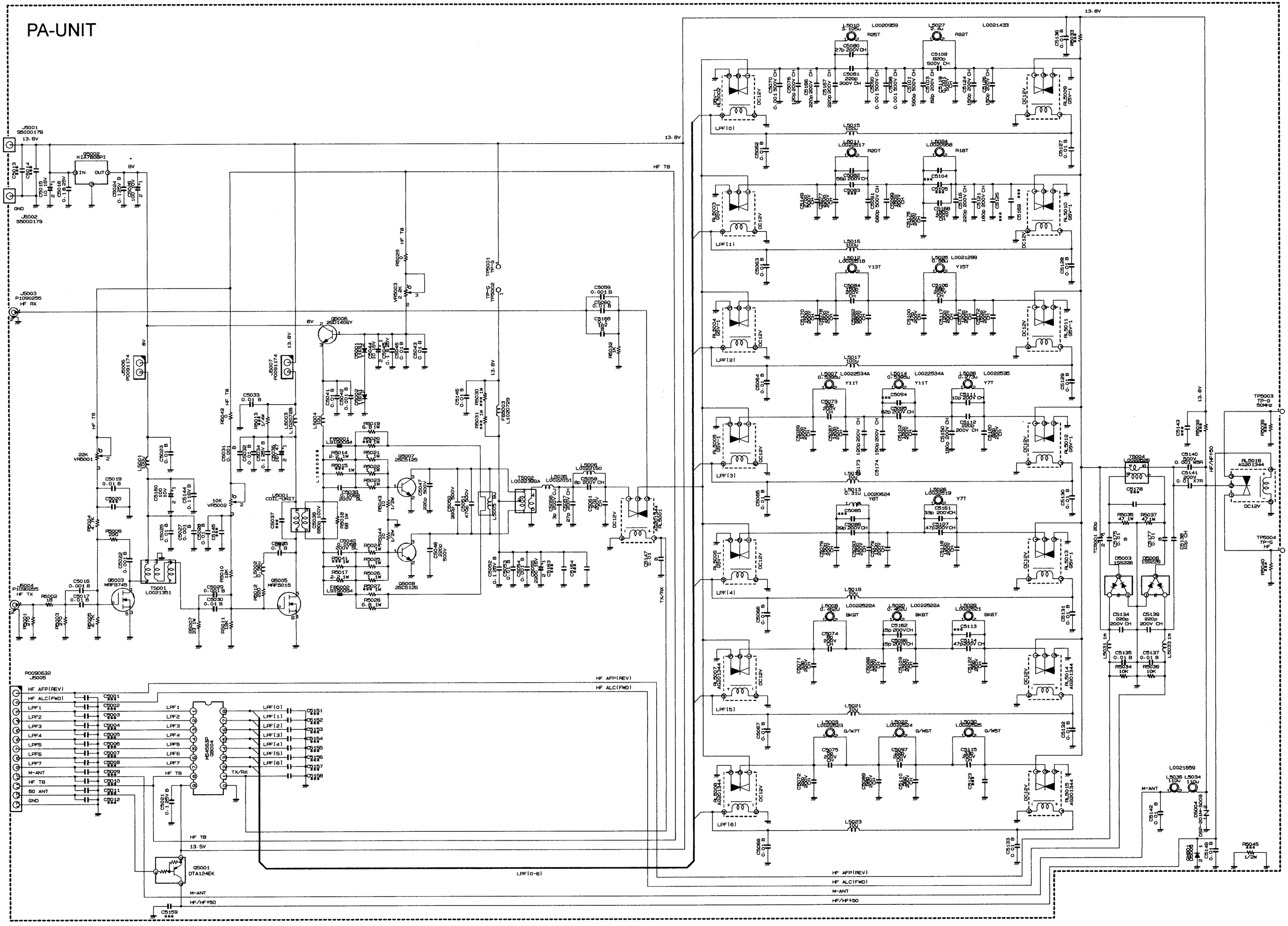
J5001
S5000179
13.8V
Q5002
KIA7808PI
IN
OUT
8V
GND
J5002
S5000179
J5003
P1090295
HF RX
J5004
P0091174
J5005
P0091174
J5007
P0091174
HF TB
13.8V
8V
TP5001
TP-G
TP5002
TP-G
VR5003
2.2K
R5029
C5059
0.001 B
C5060
0.01 B
C5155
0.1
16V
R5032
1K
Q5006
2SD1406Y
C5041
0.01 B
C5042
0.001 B
C5043
0.01 B
C5044
0.01 B
C5045
0.01 B
C5046
0.01 B
D5001
1SS133
D5002
1SS133
D5003
1SS133
D5004
1SS133
C5033
0.01 B
R5042
0
R5019
1.2M
L5003
L1020728
L5004
100
L5001
100
C5023
0.01 B
C5031
0.01 B
C5032
0.01 B
C5034
0.001 B
C5035
0.001 B
C5036
0.001 B
C5037
***
C5038
680p 100V
R5018
68 1W
C5039
0.0068
200V CH
C5040
0.0068
200V CH
R5013
1K 1W
R5014
2.2 1W
R5015
*** 1W
R5016
2.2 1W
R5017
2.2 1W
EP5001
L9190034
EP5002
L9190034
R5019
6.8 1W
R5020
*** 1W
R5021
1W
R5022
1W
R5023
1W
R5024
10 1/2W
R5025
1W
R5026
1W
R5027
*** 1W
R5028
6.8 1W
Q5007
2SC5125
Q5008
2SC5125
C5047
5000
220p
C5048
220p
500V
C5049
3600
500V
C5050
4700
500V
T5002
L0022538A
L5005
L0022150
L5006
L0022151
C5056
8p 200V CH
C5057
3p
C5058
27p
C5061
2200
200V CH
C5062
2200
200V CH
C5147
0.01 B
TX/RX
R5031
*** 1W
R5030
*** 1W
L5002
L1020729
C5145
0.01 B
C5146
0.01 B
C5052
0.1 25V B
C5053
0.01 B
C5054
0.01 B
C5055
0.1 25V B
C5154
0.01 B
C5153
2200 16V
C5152
***
C5151
***
C5149
***
C5150
***
C5148
***
C5147
***
C5146
***
C5145
***
C5144
0.1 16V B
C5143
***
C5142
***
C5141
***
C5140
***
C5139
***
C5138
***
C5137
***
C5136
***
C5135
***
C5134
***
C5133
***
C5132
***
C5131
***
C5130
***
C5129
***
C5128
***
C5127
***
C5126
***
C5125
***
C5124
150p 200V
C5123
***
C5122
***
C5121
***
C5120
***
C5119
***
C5118
***
C5117
***
C5116
***
C5115
***
C5114
***
C5113
***
C5112
***
C5111
***
C5110
***
C5109
***
C5108
820p
500V CH
C5107
47p 200V CH
C5106
***
C5105
***
C5104
***
C5103
***
C5102
***
C5101
560p 500V CH
C5100
0.001 500V CH
C5099
0.001 500V CH
C5098
0.001 500V CH
C5097
0.001 500V CH
C5096
0.001 500V CH
C5095
0.001 500V CH
C5094
***
C5093
***
C5092
***
C5091
***
C5090
27p 200V CH
C5089
***
C5088
***
C5087
***
C5086
***
C5085
***
C5084
***
C5083
***
C5082
560 200V CH
C5081
220p
200V CH
C5080
27p 200V CH
C5079
***
C5078
***
C5077
***
C5076
***
C5075
***
C5074
***
C5073
***
C5072
***
C5071
***
C5070
***
C5069
***
C5068
***
C5067
***
C5066
***
C5065
***
C5064
***
C5063
***
C5062
***
C5061
***
C5060
***
C5059
***
C5058
***
C5057
***
C5056
***
C5055
***
C5054
***
C5053
***
C5052
***
C5051
***
C5050
***
C5049
***
C5048
***
C5047
***
C5046
***
C5045
***
C5044
***
C5043
***
C5042
***
C5041
***
C5040
***
C5039
***
C5038
***
C5037
***
C5036
***
C5035
***
C5034
***
C5033
***
C5032
***
C5031
***
C5030
***
C5029
***
C5028
***
C5027
***
C5026
***
C5025
***
C5024
***
C5023
***
C5022
***
C5021
***
C5020
***
C5019
***
C5018
***
C5017
***
C5016
***
C5015
***
C5014
***
C5013
***
L5010
L0020959
L5027
L0021433
L5011
L0022537
L5024
L0020958
L5012
L0022534
L5025
L0021299
L5007
L0022534A
L5014
L0022534A
L5028
L0022535
L5026
L0020624
L5008
L0022522A
L5020
L0022522A
L5029
L0022521
L5009
L0022523
L5022
L0022524
L5030
L0022525
L5015
100U
L5016
100U
L5017
100U
L5018
100U
L5019
100U
L5021
100U
L5023
100U
R25T
R22T
R20T
R18T
Y13T
Y15T
Y11T
Y11T
Y7T
Y8T
BKGT
BKBT
BKBT
G/W7T
G/W6T
G/W5T
LPF[0]
LPF[1]
LPF[2]
LPF[3]
LPF[4]
LPF[5]
LPF[6]
DC12V
RL5002
G6V-1
RL5003
G6V-1
RL5004
G6V-1
RL5005
G6V-1
RL5006
G6V-1
RL5007
G6V-1
RL5008
G6V-1
RL5009
G6V-1
RL5010
G6V-1
RL5011
G6V-1
RL5012
G6V-1
RL5013
G6V-1
RL5014
AG2013344
RL5015
AG2013344
RL5016
AG2013344
RL5017
AG2013344
RL5018
AG2013344
RL5019
AG2013344
RL5020
AG2013344
RL5021
AG2013344
RL5022
AG2013344
RL5023
AG2013344
C5161
33p 200VCH
C5162
15p 200VCH
C5163
15p 200VCH
C5164
47p 200V CH
C5165
***
C5166
***
C5167
220p 200V
C5168
***
C5169
***
C5170
***
C5171
***
C5172
***
C5173
120p 200V
C5174
150p 200V
C5175
150p 200V
C5176
***
T5004
L0022536
T5003
L0022539
C5177
***
C5178
***
C5179
***
C5180
***
C5181
***
C5182
***
C5183
***
C5184
***
C5185
***
C5186
***
C5187
***
C5188
***
C5189
***
C5190
***
C5191
***
C5192
***
C5193
***
C5194
***
C5195
***
C5196
***

FT-847

CONNECTION DIAGRAM

AF-CNTL-UNIT

RF-UNIT

PA-UNIT

V_U-PA-UNIT

PANEL-UNIT

PLL-UNIT

DSP-UNIT

MIC-UNIT

PHONE JACK-UNIT

MAIN DIAL

SHUTLE

PLL-UNIT

NOTE:
RESISTOR VALUES ARE IN Ω, 1/16W :
CAPACITOR VALUES ARE IN μF, 50V :
T:CAPACITOR VALUES ARE TANTALUM :
ELECTOROLYTIC CAPACITOR ARE IN μF :
INDUCTOR VALUES ARE IN H :
COILES VALUES ARE IN H :
UNLESS OTHERWISE NOTED.

RF-UNIT

V_U-PA-UNIT

DSP-UNIT

NOTE:
RESISTOR VALUES ARE IN Ω. 1/16W :
CAPACITOR VALUES ARE IN μF. 50V :
(T)CAPACITOR VALUES ARE TANTALUM :
UNLESS OTHERWISE NOTED.